MODEL：8020 (8020V)　　Jig Saw

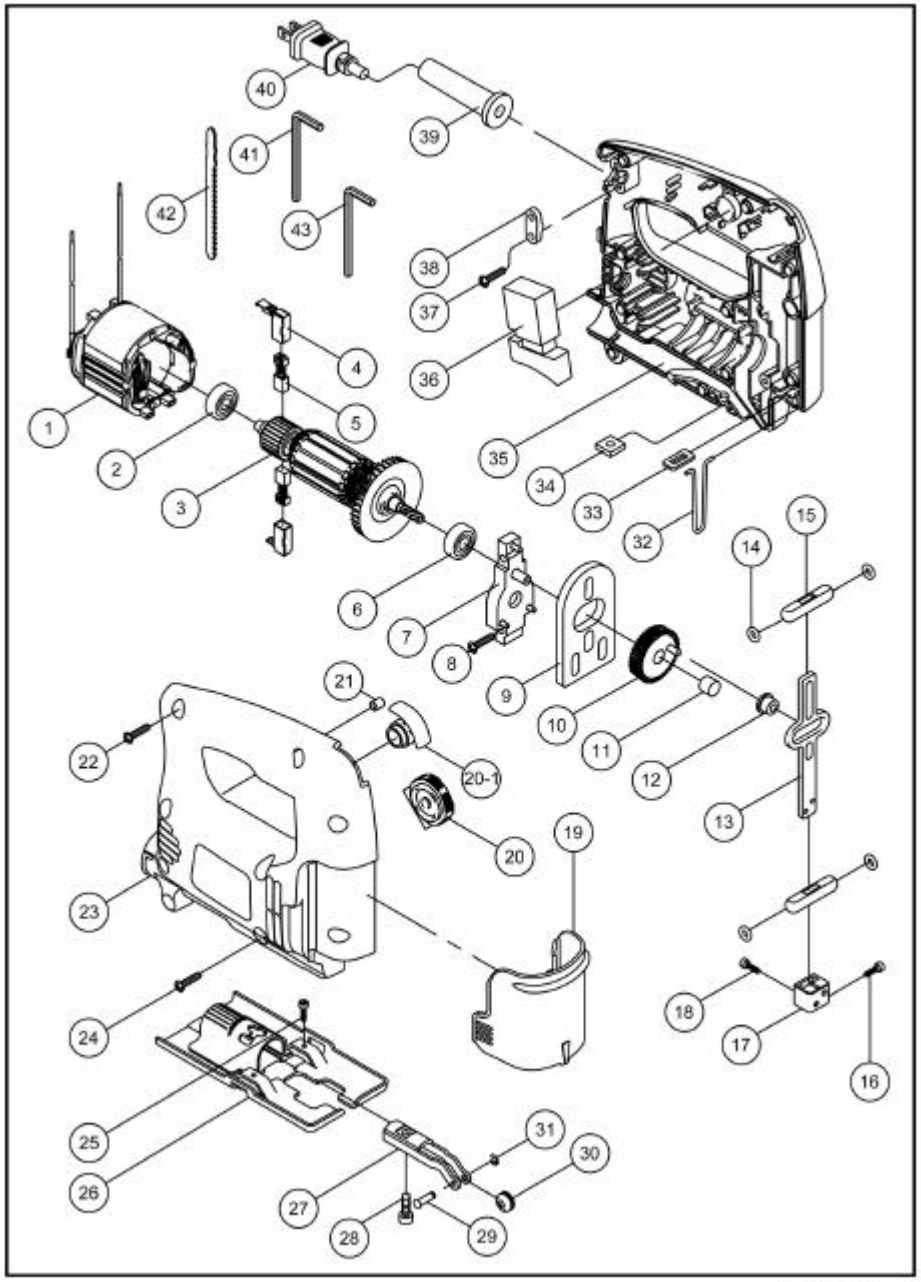

8020(8020V)_2

ITEM NO	PART USED	Q'TY USED	PART NAME	STANDARDS
1	1001107	1	Field Assembly	(115V)
	1002107	1	Field Assembly	(230V)
2	0606002	1	Ball Bearing	626-2RS
3	1803079	1	Armature Assembly	(115V)
	1804079	1	Armature Assembly	(230V)
4	0903002	2	CarbonBrush Holder	
5	0901031	2	Carbon Brush	
6	0604001	1	Ball Bearing	608-2RS
7	1908023	1	Bearing Place	
8	2492022	2	Tapping Screw	TS4X22
9	1209575	1	Balance Plate	
10	1905116	1	Gear	
11	2108051	1	Gear Bush	
12	2108048	1	Oil-bearing Bush	
13	2106524	1	Plunger	
14	1606152	4	O Type Washer	Ø10×Ø5
15	2108049	2	Plunger Stable	
16	2452010	1	Hex. Socket Hd. bolt	M4X10
17	3101041	1	Blade Clip	
18	2451012	1	Hex. Socket Hd. bolt	M3X12
19	1604311	1	Transparency Cover	
20	0802032	1	Variable Speed Dial Switch	(115V)
	0802033	1	Variable Speed Dial Switch	(230V
20-1	1604306	1	Cover	
21	1606154	2	Contrary press chu nk	
22	2492018	9	Tapping Screw	TS4X18
23	1607094	1	Housing Set (L)	
24	2492014	1	Tapping Screw	TS4X14
26	1209590	1	Base Complete	
27	1209591	1	Guide Pulley Seat	
28	2453020	1	Hex. Socket Hd. bolt	M5X20
29	2106499	1	Pin	
30	2106500	1	Guide Pulley	
31	2204030	1	Retaining Ring	E-3
32	1209576	1	Surveyor`s Pole	
33	1606153	1	Dust-proof Board	
34	2106562	1	Fixity nut	M5X13X13
35	1607093	1	Housing Set (R)	
36	0704078	1	Switch	
37	2492014	2	Tapping Screw	TS4X14
38	1604018	1	Staim Relief	
39	1604236	1	Cord Guard	Ø8×Ø8.5×70
40	1118012	1	Power Supply Cord With Plug	(115V)
	1103002	1	Power Supply Cord With Plug	(230V)

ITEM NO	PART USED	Q'TY USED	PART NAME	STANDARDS
OPTIONAL ACCESSORIES				
25	2452005	2	Hex. Socket Hd. bolt	M4X5
41	2603040	1	Hex. Bar Wrench	4mm
42	1407101	1	Jigsaw Blade	6TPI X3 1/8" X5/16"
	1407104	1	Jigsaw Blade	18TPI X2 3/4" X5/16"
43	2603050	1	Hex. Bar Wrench	5mm