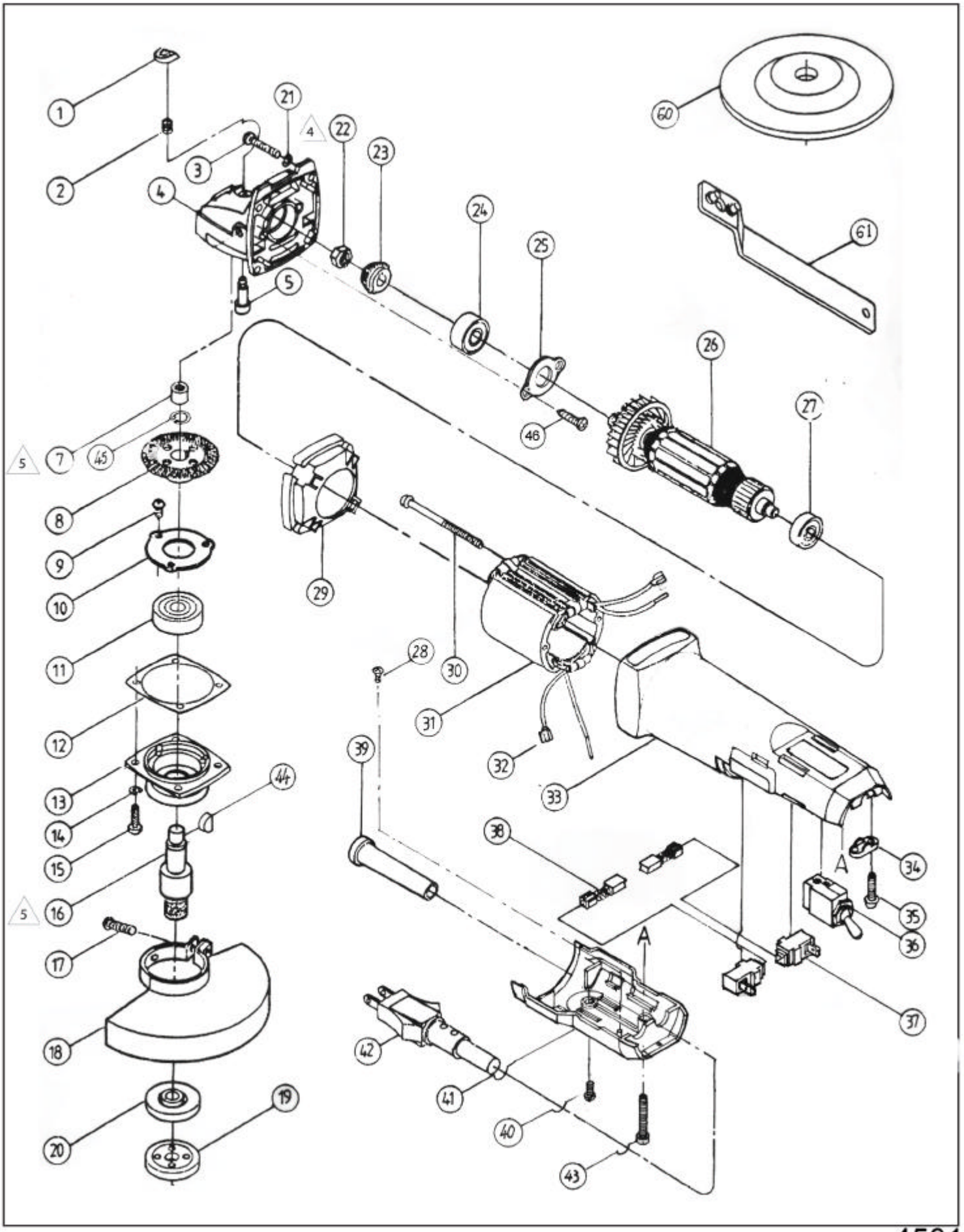
1
2
3
4
5
7
8
9
10
11
12
13
14
15
16
17
18
19
20
21
22
23
24
25
26
27
28
29
30
31
32
33
34
35
36
37
38
39
40
41
42
43
44
45
46
60
61
A
A
4
5
5

4501

ITEM NO.	PART NO ITEM	Q'TY USED	PART NAME	STANDARDS	NOTE
1	1604290	1	Lock Pin Cover		
2	2207099	1	Spring		
3	2412020	4	⊕Pan Hd. Screw	M4×20	
4	3003020N-22	1	Gear Housing		
5	2106496	1	Lock Pin		
7	0607014	1	Needle Bearing	HK-0910	
8	1907035	1	Spiral Bevel Gear		
9	2492007	3	Tapping Screw	TS4×7	
10	1209413	1	Bearing Retainer		
11	0606011	1	Ball Bearing	6201-2NSL	
12	1209411	1	Shin		
13	3004062	1	Front Cover		
14	2222040	4	Spring Washer	Ø4	
15	2412014	4	⊕Pan Hd. Screw	M4×14	
16	2004003-N	1	Spindle		
17	2413015	1	⊕Pan Hd. Screw	M5×15	
18	1203049	1	Wheel Cover		
19	2104072-1	1	Lock Nut		
20	2104071	1	Inner Flange		
21	2222040	4	Spring Washer	Ø4	
22	2106591	1	Hex. Nut	M6×1	
23	1907036	1	Pinion Gear		
24	0604001	1	Ball Bearing	N608-2RS	
25	1202001	1	Bearing Retainer	ψ30×ψ17×2.6	
26	1801074	1	Armature Assembly	(115V)	
	1802074	1	Armature Assembly	(230V)	
27	0604003	1	Ball Bearing	N627-2RS	
28	2412006	1	⊕Pan Hd. Screw	M4×6	
29	1604277	1	Fan Guide		
30	2412065	2	⊕Pan Hd. Screw	M4×65	
31	1001079	1	Field Assembly	(115V)	
	1002079	1	Field Assembly	(230V)	
32	2307022	2	Terminal		
33	3001033	1	Motor Housing		
34	1604018	1	Strain Relief		
35	2412014	2	⊕Pan Hd. Screw	M4×14	
36	0704083	1	Switch		
37	0903053	2	Carbon Brush Holder		
38	0901031-1	2	Carbon Brush		
39	1604236	1	Cord Guard		
40	2412006	1	⊕Pan Hd. Screw	M4×6	
41	3005169	1	Rear Cover		
42	1103003	1	Power Supply Cord	(230V)	
	1118011	1	Power Supply Cord	(115V)	

ITEM NO.	PART NO ITEM	Q'TY USED	PART NAME	STANDARDS	NOTE
43	2412032	1	⊕Pan Hd. Screw	M4×32	
44	2201003	1	Woodruff Key	Ø10×3	
45	2203120	1	Retaining Ring	C-12	
46	2422010	2	⊕ Counter Sunk Hd. Screw	M4×10	
			ACCESSORIES		
60	3610040	1	Depressed Center Wheel		
61	1211001	1	Lock Nut Wrench		
			OPTIONAL ACCESSORIES		
	1602031	1	Side Handle		
	2476030	1	Hex. Hd. Screw	M8×30	