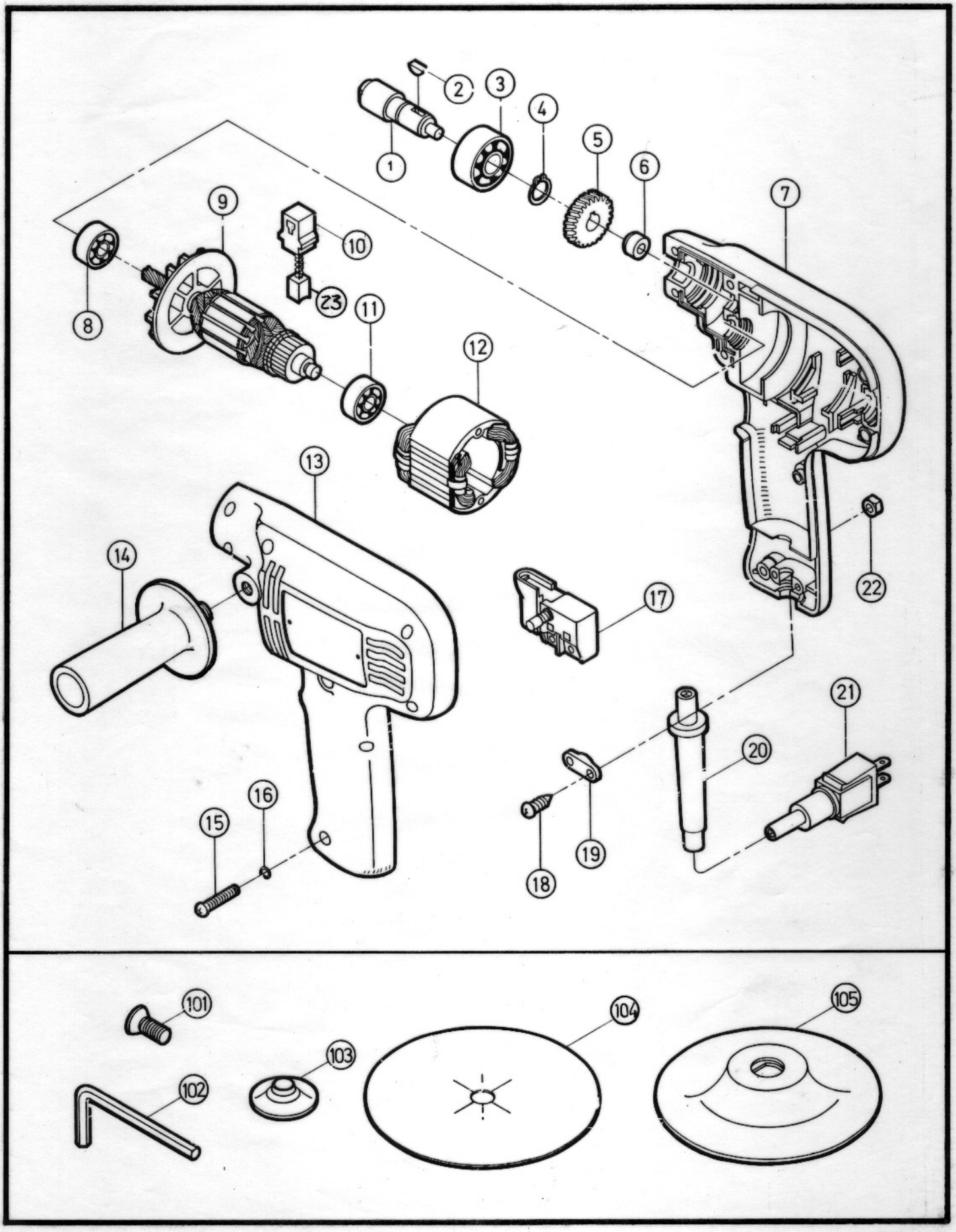
1
2
3
4
5
6
7
8
9
10
23
11
12
13
14
15
16
17
18
19
20
21
22
101
102
103
104
105

3405

MODEL：3405 5” DISC SANDER

ITEM NO.	PART NO.	Q’TY USED	PART NAME	
1	2004068	1	Spindle	ψ13×M8
2	2201003	1	Woodruff Key	3×ψ10
3	0604011	1	Ball Bearing	6201LLB
4	2203120	1	Retaining Ring	C-12
5	1905072	1	Helical Gear	
6	2102029	1	Bushing	
7	1607038	1	Housing Set	(R)
8	0604001	1	Ball Bearing	608LLB
9	1803036	1	Armature Assembly	(115V)
	1804036	1	Armature Assembly	(230V)
10	0903023	2	Carbon Brush Holder	
11	0603003	1	Ball Bearing	627LB
12	1001065	1	Field Assembly	(115V)
	1002065	1	Field Assembly	(230V)
13	1607039	1	Housing Set	(L)
14	1602001	1	Side Handle	
15	2412020	8	⊕Pan Hd. Screw	M4×20
16	2222040	8	Spring Washer	ψ4
17	0704034	1	Switch	
18	2492016	2	Tapping Screw	TS4×16
19	1604018	1	Strain Relief	
20	1604236	1	Cord Guard	
21	1118002	1	Power Supply Cord With Plug(115/230V)	
	1103002	1	Power Supply Cord With Plug(VDE)	
	1103012	1	Power Supply Cord With Plug(SAA)	
23	3301004	8	Hex. Nut	M4
24	0901023	2	Carbon Brush	

ITEM NO.	PART NO.	Q’TY USED	PART NAME	
ACCESSORIES				
101	2106289	1	Installation Screw	M8×20
102	2603050	1	Hex. Wrench	5mm
103	1209301	1	Counter Sunk Washer	
104	3655080	1	Abrasive Wheel	ψ5”×#80
105	1604132	1	Plastic Pad	ψ120×ψ13
	2905307	1	Instruction Manual	(not show)