1	2106073	1	Side Handle								
2	3001032	1	Motor Housing			OPTIONAL ACCESSORIES					
3	2004061-N	1	Spindle			50	1402003	1	Chuck Key		
4	2202027	1	Square Key	4×4×7mm		51	1604162	1	Ferrule		
5	2106278	1	Bearing Cap	Bearing Cap		52	1401010	1	Drill Chuck		
6	2413035	2	⊕Pan Hd. Screw	M5×35		53	2106148-1	1	Chuck Set Screw	1/4×28UNF×36(L)	
7	0606012	1	Ball Bearing	6202-2NSL			2905137-1	1	Instruction Manual (not shown)		
8	3004038	1	Front Cover								
9	2413035	2	⊕Pan Hd. Screw	M5×35							
10	2102032	1	Spindle Bushing								
11	1905064-1	1	Spiral Bevel Gear								
12	2203140	1	Retaining Ring	C-14							
13	0607014	1	Needle Bearing	HK0910							
14	0603002	1	Ball Bearing	N626-RS							
15	1906024-1	1	Gear Shaft								
16	1905097	1	Pinion Gear								
17	0607011	1	Needle Bearing	HK-0609							
18	3002033-N	1	Inner Cover								
19	1201027	1	Fan Guide								
20	0604001	1	Ball Bearing	N608-2RS							
21	1801071	1	Armature Assembly	(115V)							
	1802071	1	Armature Assembly	(230V)							
22	0604001	1	Ball Bearing	N608-2RS							
23	2413055	2	⊕Pan Hd. Screw	M5×55							
24	1001130	1	Field Assembly	(115)							
	1002006	1	Field Assembly	(230V)							
25	0903025	2	Carbon Brush Holder								
26	1602015	1	Handle								
27	2106600	1	Screw	W5/16x20							
28	0902003	2	Bakelite Nut								
29	0901004-1	2	Carbon Brush								
30	2443008	2	Hex. Socket No Hd. Screw	M5×8							
31	1604018	1	Strain Relief								
32	2412014	2	⊕Pan Hd. Screw	M4×14							
33	1604236	1	Cord Guard								
34	1606023	1	Wire Guard								
35	0704080	1	Switch								
36	1604270	1	Variable Speed Knob, adjusting								
37	3005151	1	Handle Cover								
38	2412018	2	⊕Pan Hd. Screw	M4×18							
39	1116011	1	Power Supply Cord With Plug	(115V)							
	1103003	1	Power Supply Cord With Plug	(230V)							
40	2442004	1	Hex. Socket No Hd. Screw	M4×4							
41	2201001	1	Woodruff Key	2.5×ψ8							
42	0512003	2	Insulating Washer	ψ16.3							

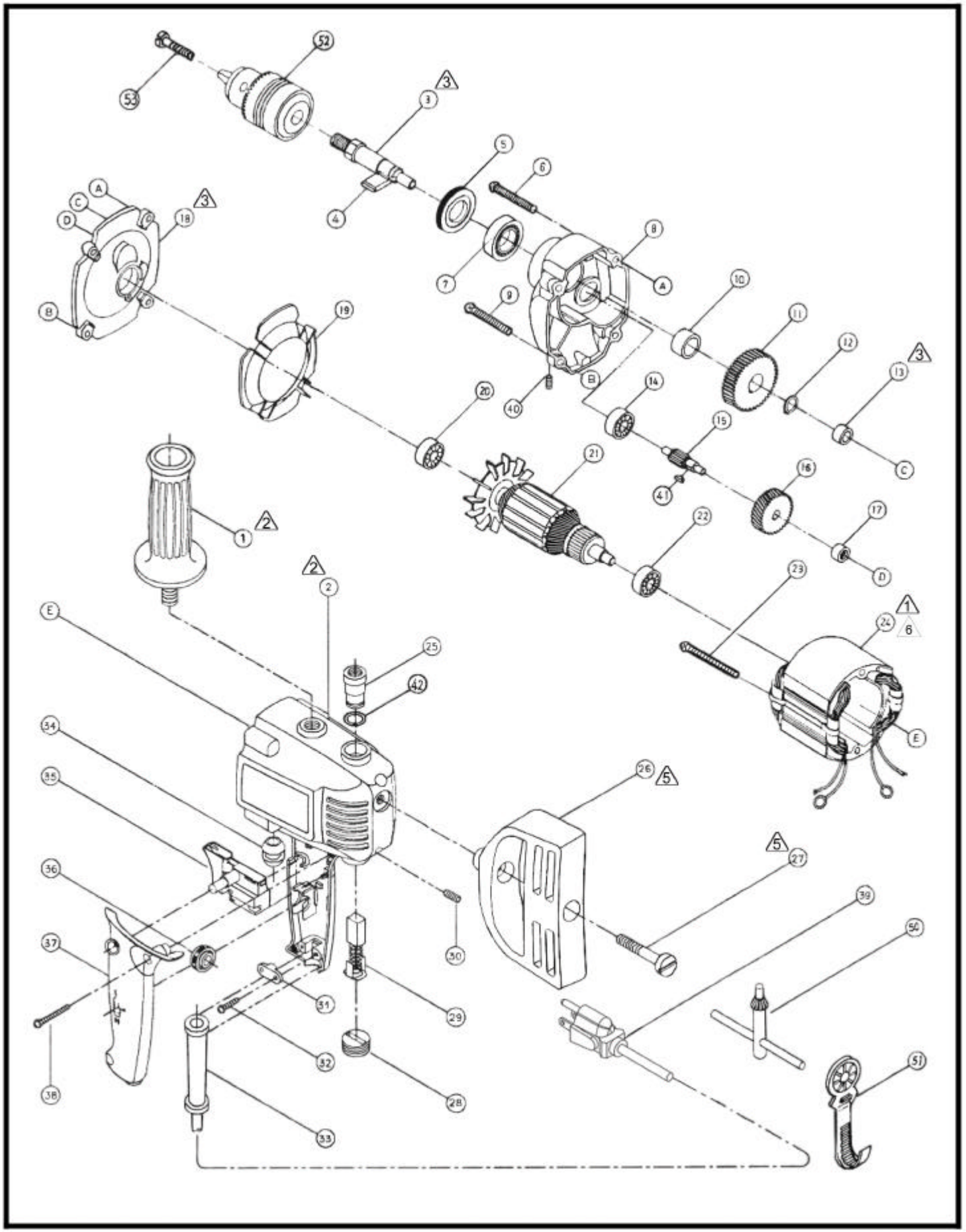
52
53
3
3
5
6
A
C
D
18
3
4
8
A
7
10
B
19
9
11
12
3
13
20
40
B
14
15
C
21
41
16
1
2
22
17
D
2
23
1
24
6
E
E
25
42
34
26
5
35
5
27
36
39
54
37
30
51
29
32
38
28
33