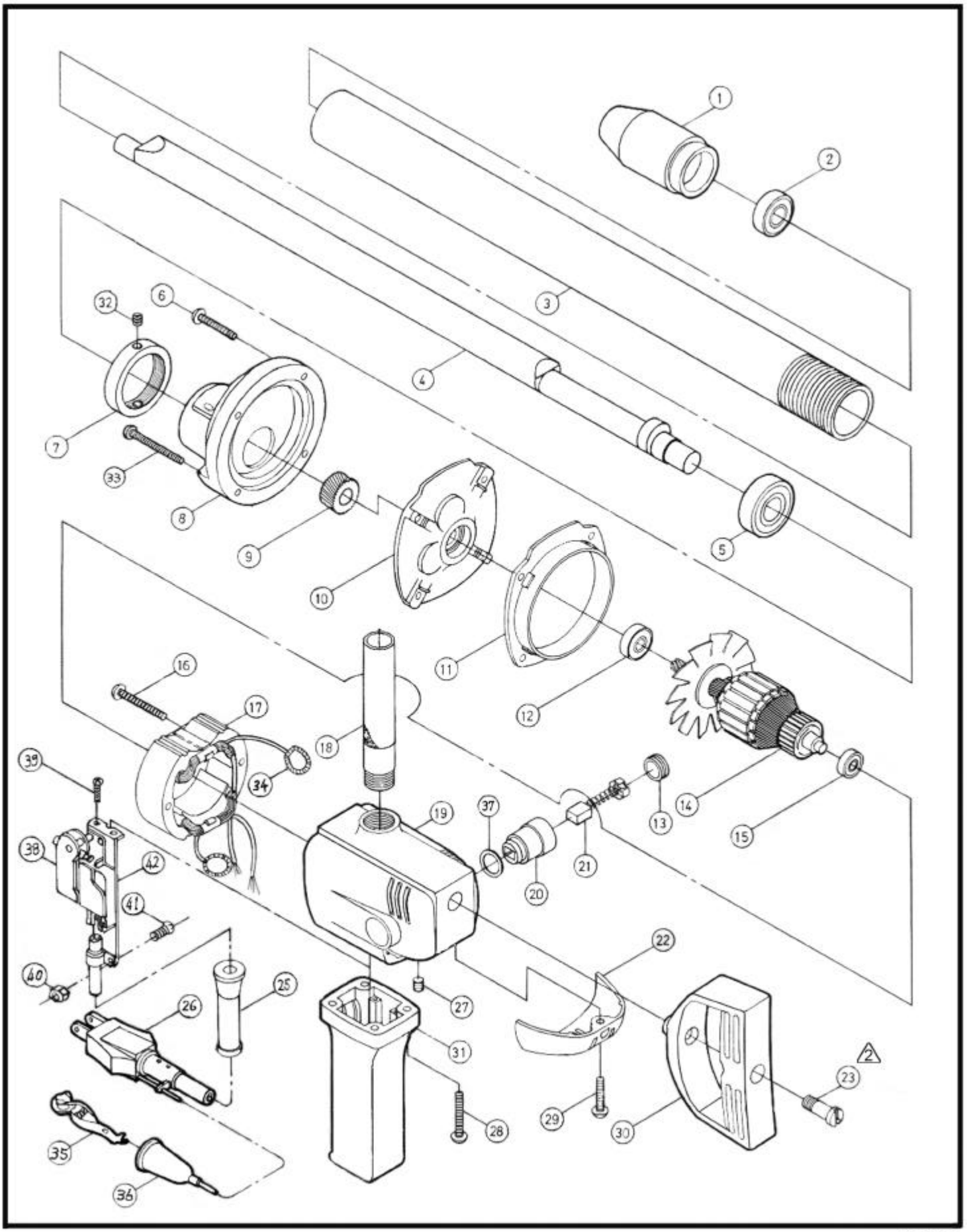
1
2
3
4
5
6
7
8
9
10
11
12
13
14
15
16
17
18
19
20
21
22
23
25
26
27
28
29
30
31
32
33
34
35
36
37
38
39
40
41
42
2

1313

ITEM NO.	PART NO	Q'TY USED	PART NAME	STANDARDS	NOTE
1	2106196	1	Vibration Head	ψ48×95	
2	0604012	1	Ball Bearing	6202-VV	
3	2106194	1	Vibration Pipe		
4	2106193	1	Eccentric Shaft		
5	0604020	1	Ball Bearing	6303LLB	
6	2413035	2	⊕Pan Hd. Screw	M5×35	
7	2106195	1	Round Nut	M48 (16UNC)	
8	3004032	1	Front Cover		
9	1905019	1	Gear		
10	3002010	1	Inner Cover		
11	1201004	1	Fan Guide		
12	0604006	1	Ball Bearing	N6001-2RS	
13	0902003	2	Bakelite Nut		
14	1801053	1	Armature Assembly	(115V)	
	1802053	1	Armature Assembly	(230V)	
15	0604001	1	Ball Bearing	N608-2RS	
16	2413045	2	⊕Pan Hd. Screw	M5×45	
17	1001005	1	Field Assembly	(115V)	
	1002005	1	Field Assembly	(230V)	
18	2106073	1	Side Handle		
19	3001011	1	Motor Housing		
20	0903025	2	Carbon Brush		
21	0901004-1	2	Carbon Brush		
22	3005031	1	Rear Cover		
23	2106600	1	Handle Set Screw	W5/16x20	
24					
25	1604242	1	Cord Guard	(115/230V)	
26	1116011	1	Power Supply Cord		
27	2442006	2	Hex. Socket No Hd. Screw	M4×6	
28	2413015	4	⊕Pan Hd. Screw	M5×15	
29	2412014	1	⊕Pan Hd. Screw	M4×14	
30	1602015	1	Handle		
31	3005033	1	Switch Handle		
32	3445006	2	Hex. Socket No Hd. Srew	W5/16×6	
33	2413050	2	⊕Pan Hd. Screw	M5×50	
34	2210002	2	Copper Spring		
35	1209002	1	Grounding Clip		
36	1606001	1	Clip Cover		
37	0512003	2	Insulating Washer	ψ15.5	
38	0704002	1	Switch		

ITEM NO.	PART NO	Q'TY USED	PART NAME	STANDARDS	NOTE
39	2412010	2	⊕Pan Hd.	M4×10	
40	3301004	1	Hex. Nut	M4	
41	2412010	1	⊕Pan Hd.	M4×10	
42	1209020	1	Switch Base		
				–	